❖

●

●

●

●

●

❖

❖

❖

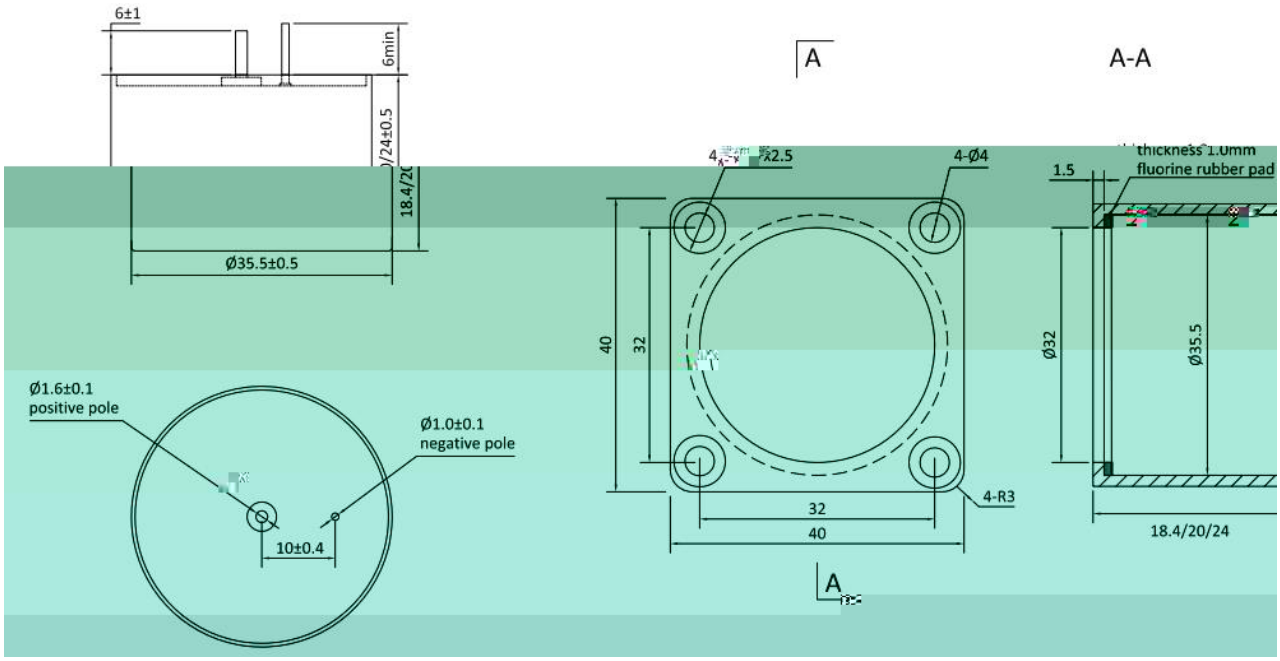
6±1
6min
24±0.5
18.4/20
Ø35.5±0.5
Ø1.6±0.1
positive pole
Ø1.0±0.1
negative pole
10±0.4
A
A-A
4-Ø2.5
4-Ø4
40
32
32
40
4-R3
A
1.5
thickness 1.0mm
fluorine rubber pad
Ø32
Ø35.5
18.4/20/24

❖

❖